1-3-12

Lec 29

1-stage opamps — cannot drive resistive loads

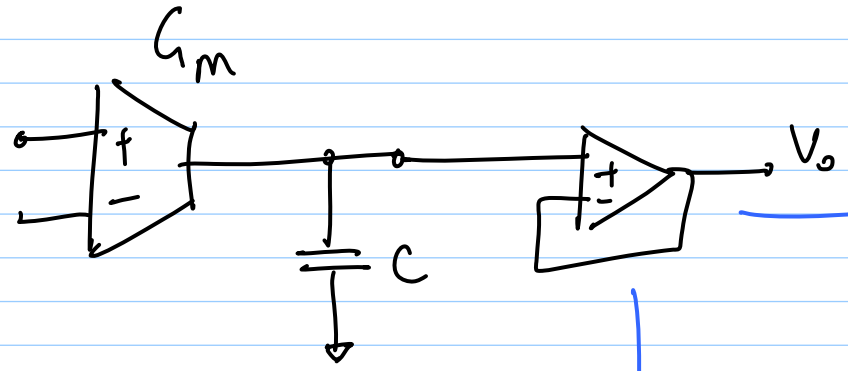

→ C.D. amp ✗ (swing limit problem)

→ (1-stage opamp)

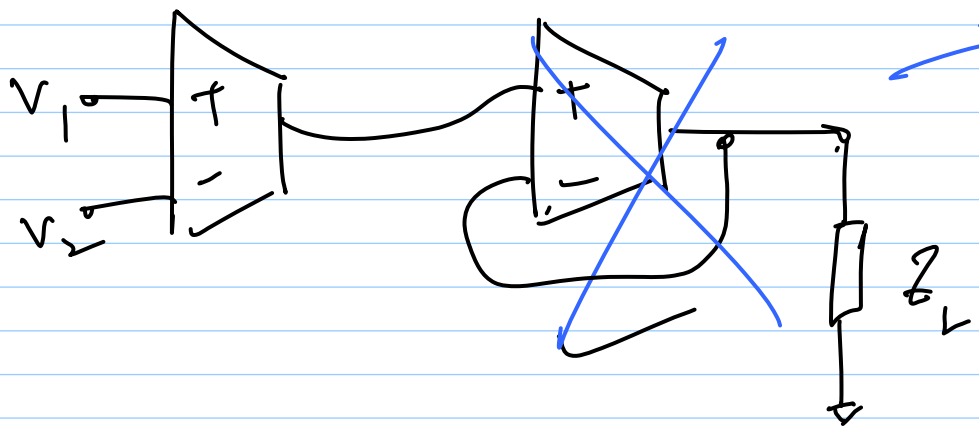

→ opamp ($w \sim \int dt$)

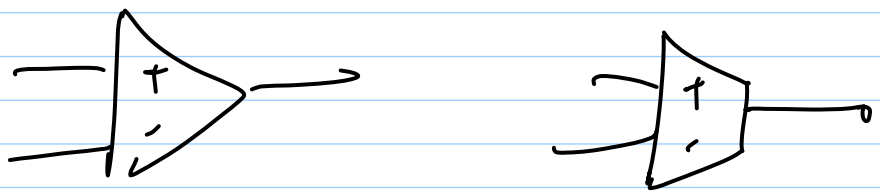

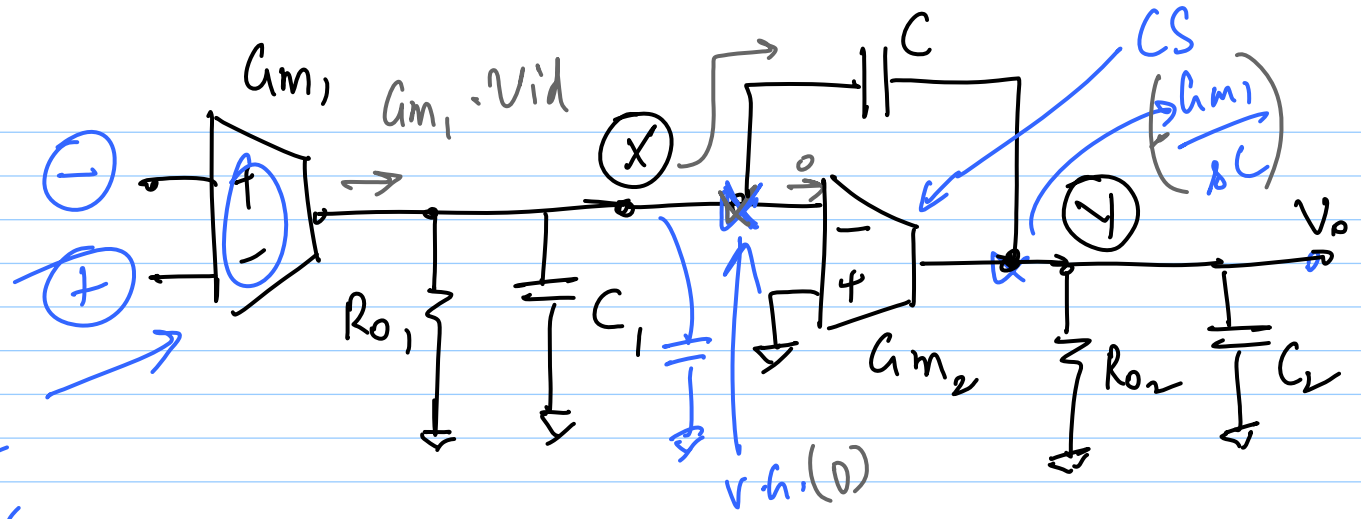

$$\omega_n = \frac{G_{m1}}{C}$$

Miller capacitance

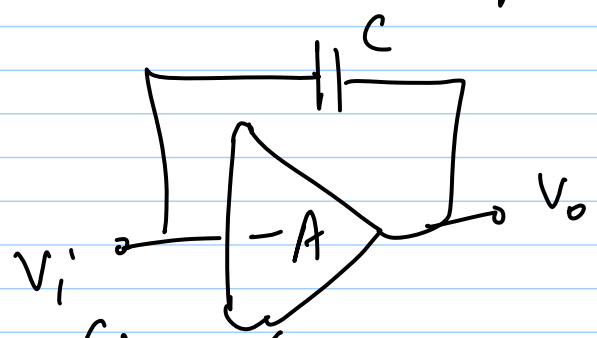

$$C_{in} = (1+A)C$$

Two-stage opamp

1) DC gain

$$= \frac{G_{m1} G_{m2}}{G_{o1} G_{o2}}$$

w/ resistive load $R_L << \frac{1}{G_{o1}}, \frac{1}{G_{o2}}$

$$\text{DC gain} = \frac{G_{m1} G_{m2}}{G_{o1} G_L}$$

* optimise 1st stage for DC gain

2) $\omega_n = \frac{G_{m1}}{C}$

3) $\left(\frac{v_o}{v_{id}}\right)$

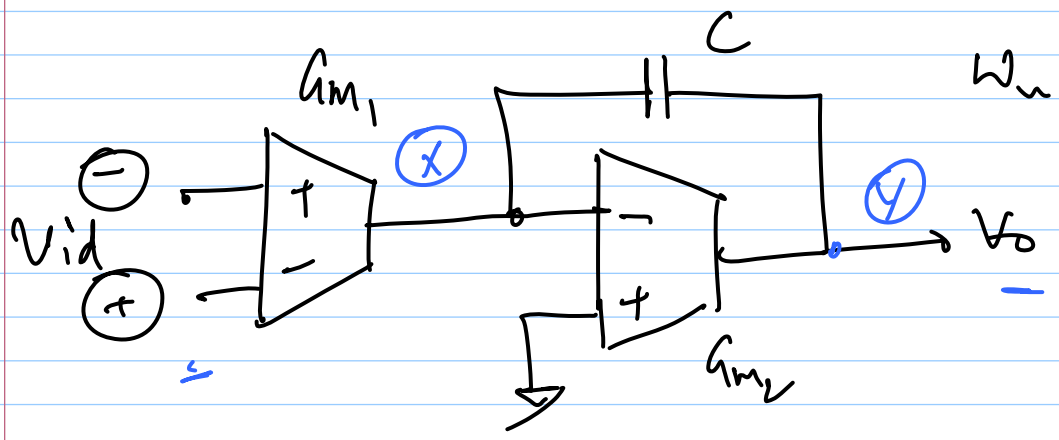

$$\omega_u = \frac{G_{m_1}}{C}$$

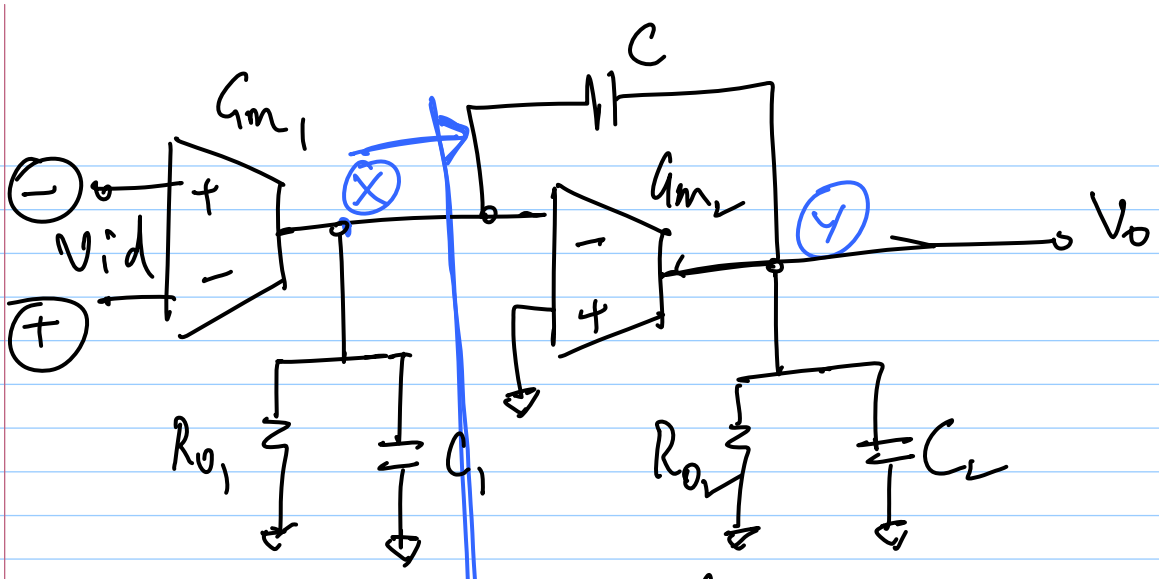

2 poles
1 zero

$$\left(\frac{v_o}{v_{id}}\right)(s) = \frac{G_{m_1}(G_{m_2} - sC)}{\left\{G_{o_1}G_{o_2} + s\left[C(G_{m_2}+G_{o_1}+G_{o_2}) + G_{o_2}C_1 + G_{o_1}C_2\right] + s^2(C_1C + C_2C + C_1C_2)\right\}}$$

DC gain looks ok

(zero) $z_1 = +\frac{G_{m2}}{C}$ (RHP zero)

$ax^2 + bx + c = 0$ — x_1, x_2 are roots

x_1 and x_2 are far apart $(x_1 << x_2)$

$x_1 \approx \frac{-c}{b}$; $x_2 \approx \frac{-b}{a}$

for an opamp: p_1 = dominant pole

p_2 = N.D. pole

$$p_1 \approx \frac{-c}{b} = -\frac{G_{o1} G_{o2}}{\left\{ C\left(G_{m2} + G_{o1} + G_{o2}\right) + G_{o2} C_1 + G_{o1} C_2 \right\}}$$

$$\approx \frac{G_{o1}}{C\left(\frac{G_{m2}}{G_{o2}} + 1 + \frac{G_{o1}}{G_{o2}}\right) + C_1 + \frac{G_{o1}}{G_{o2}} \cdot C_2}$$

$$\approx \frac{G_{o1}}{C \cdot \left(\frac{G_{m2}}{G_{o2}}\right)} = \frac{G_{o1} G_{o2}}{G_{m2}} \cdot \frac{1}{C}$$

$$p_2 = -\frac{b}{a} = -\frac{C(G_{m_2}+G_{o_1}+G_{o_2}) + C_1 G_{o_2} + C_2 G_{o_1}}{C_1 C + C_2 C + C_1 C_2}$$

divide Nr & Dr. by $C + C_1$

$$p_2 = -\frac{\frac{C}{C+C_1} \cdot G_{m_2} + G_{o_2} + G_{o_1} \cdot \frac{C+C_2}{C+C_1}}{C_2 + \frac{C_1 C}{C+C_1}}$$

<u>pole @ node Y</u>

$$\longrightarrow \frac{G_{eff}}{C_{eff}}$$

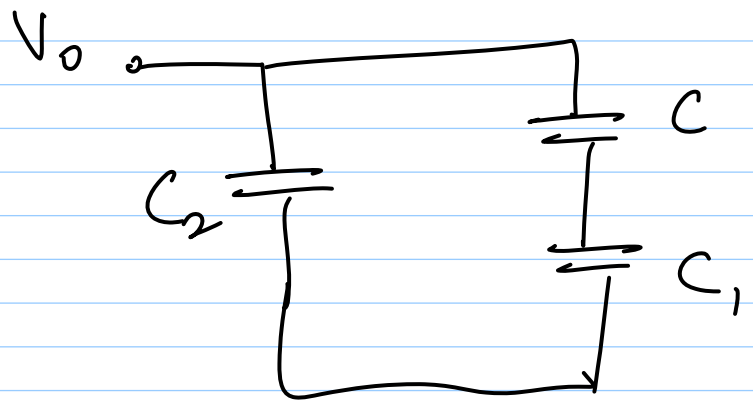

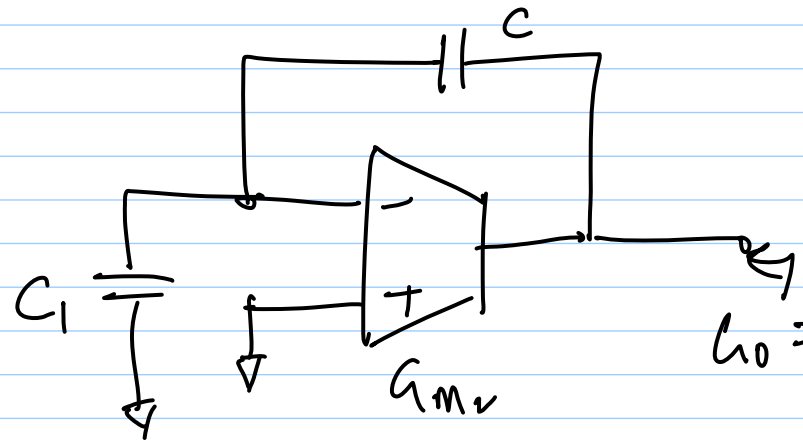

$$G_o = \frac{G_{m_2} \cdot C}{C + C_1}$$