Problem Set 9

EE419: Digital Communication Systems

1. Consider $C = \{000, 011, 101, 110\}$ used with BPSK modulation ($0 \to +1; 1 \to -1$) over an AWGN channel with noise variance σ^2. Let $\mathbf{c}$ and $\hat{\mathbf{c}}$ denote the transmitted and decoded codewords, respectively.

   (a) Find E_b/N_0 as a function of σ.

   (b) For an optimal **hard-decision** decoder, find $P_e = \Pr(\hat{\mathbf{c}} \neq \mathbf{c} | \mathbf{c} = 000\}$. Express the dominant term in P_e as $\sigma \to 0$ in the form $a_1 Q(\sqrt{\frac{a_2 E_b}{a_3 N_0}})$ (a_i: integers).

   (c) For an optimal **soft-decision** decoder, find the union bound estimate (UBE) for $\Pr(\hat{\mathbf{c}} \neq \mathbf{c} | \mathbf{c} = 000\}$ in the form $b_1 Q(\sqrt{\frac{b_2 E_b}{b_3 N_0}})$ (b_i: integers).

   (d) Find the coding gain in E_b/N_0 of soft over hard decoding as $\sigma \to 0$.

2. Consider the convolutional encoder shown in Fig. 1.

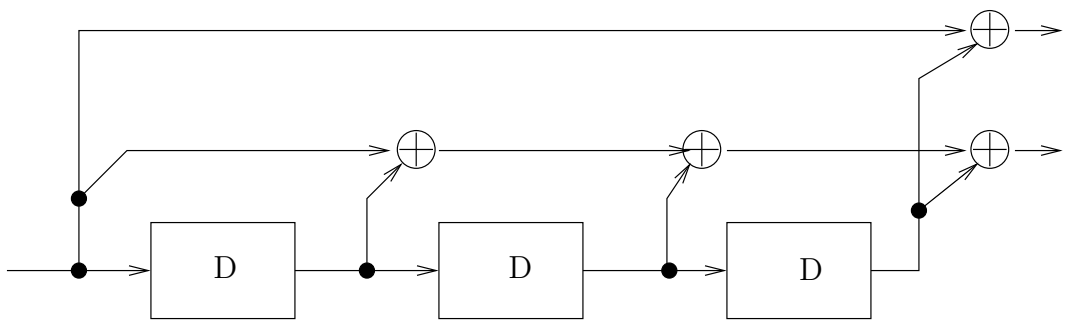

Figure 1: Encoder for Problem 2

   (a) Draw one stage of the trellis for the encoder.

   (b) Encode the infinite message sequence (11111111.....) (all 1s).

3. Consider the convolutional encoder shown in Fig. 2.

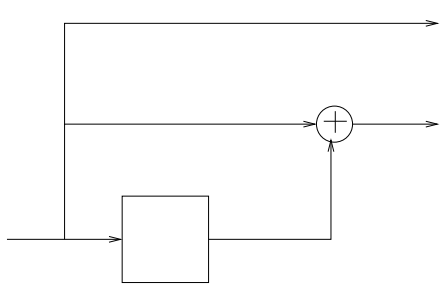

Figure 2: Encoder for Problem 3

   (a) Draw the trellis corresponding to four information digits.

(b) Find the number of codewords represented in the trellis (or calculate the number of paths in the trellis).

(c) Decode the received sequence $\mathbf{r} = [11; 01; 10; 00; 10]$ over a BSC.

(d) Decode the received sequence $\mathbf{r} = [1.5, -1.1; +0.8, -2.5; -0.4, +0.4; -1.2, +0.7; +2.8, -0.9]$ assuming BPSK modulation over an AWGN channel.

4. Let u be the input sequence to a rate-1/2 convolutional encoder. Let $v^{(0)}$ and $v^{(1)}$ denote the two output sequences.

$$\begin{aligned} v_n^{(0)} &= u_n + u_{n-1} + u_{n-2}, \\ v_n^{(1)} &= u_n + u_{n-1}. \end{aligned}$$

(a) Provide a D-flipflop implementation of the encoder. Provide one stage of the complete trellis.

(b) Decode $\mathbf{r} = [00\ 10\ 11\ 01\ 10]$ over a BSC assuming zero termination.